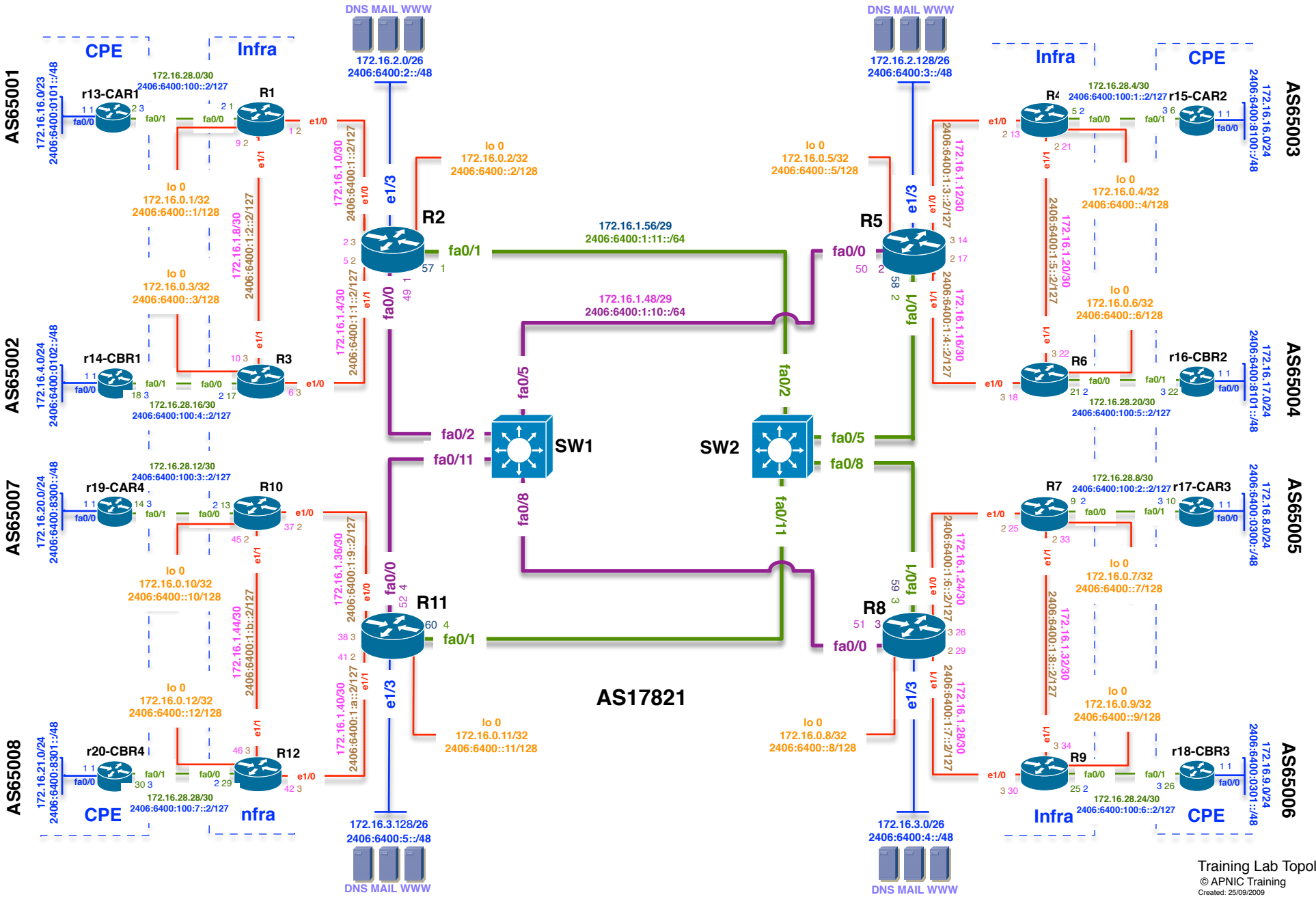

Training Lab Topology

© APNIC Training

Created: 25/09/2009

Last update: 15/10/2018