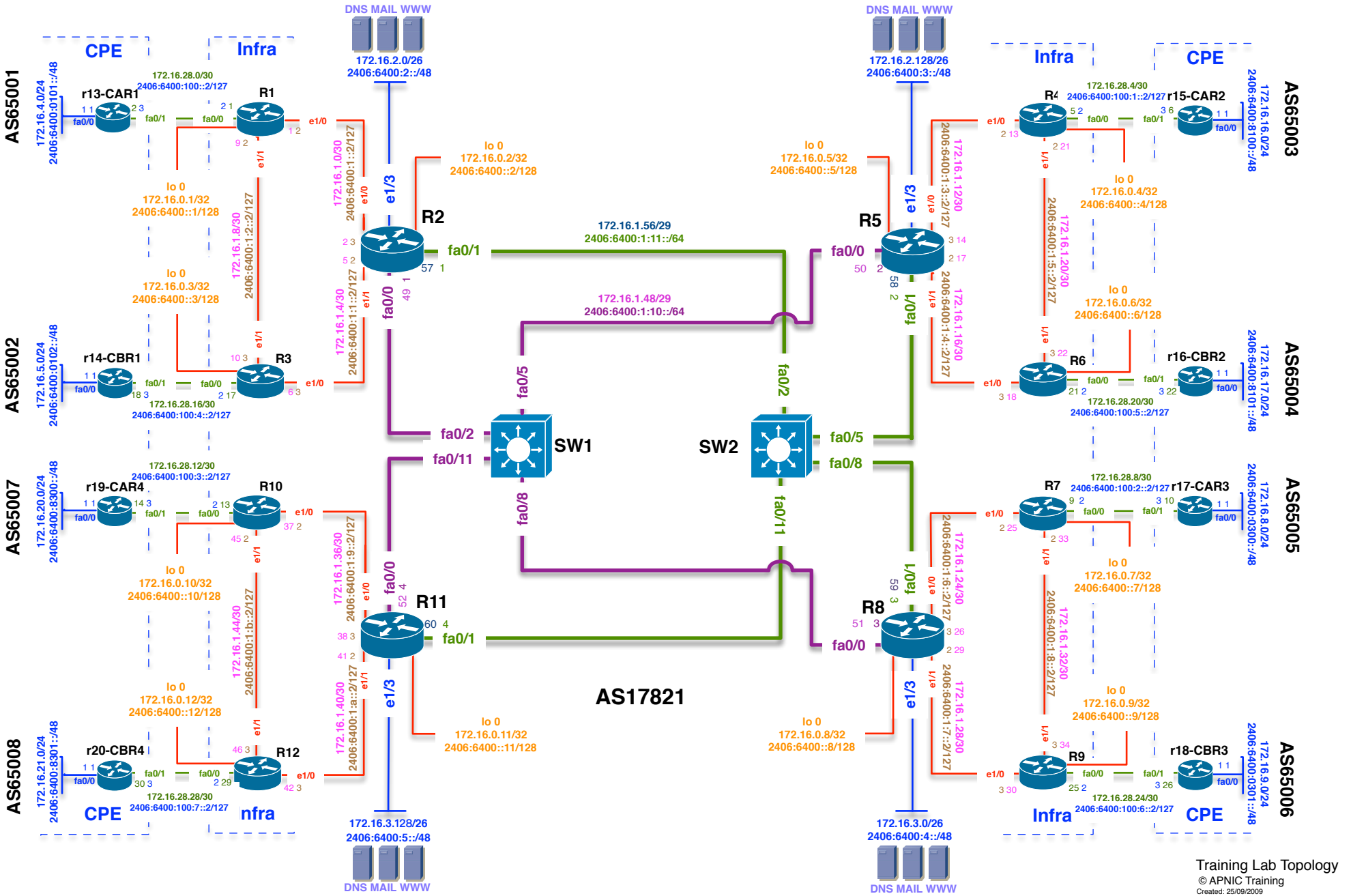
AS17821
SW1
SW2
R2
R3
R5
R6
R7
R8
R9
R10
R11
R12
R1
R4
r13-CAR1
r14-CBR1
r15-CAR2
r16-CBR2
r17-CAR3
r18-CBR3
r19-CAR4
r20-CBR4
AS65001
AS65002
AS65003
AS65004
AS65005
AS65006
AS65007
AS65008
CPE
Infra
DNS MAIL WWW
172.16.2.0/26
2406:6400:2::/48
172.16.2.128/26
2406:6400:3::/48
172.16.3.128/26
2406:6400:5::/48
172.16.3.0/26
2406:6400:4::/48
172.16.1.56/29
2406:6400:1:11::/64
172.16.1.48/29
2406:6400:1:10::/64
lo 0
172.16.0.1/32
2406:6400::1/128
lo 0
172.16.0.2/32
2406:6400::2/128
lo 0
172.16.0.3/32
2406:6400::3/128
lo 0
172.16.0.4/32
2406:6400::4/128
lo 0
172.16.0.5/32
2406:6400::5/128
lo 0
172.16.0.6/32
2406:6400::6/128
lo 0
172.16.0.7/32
2406:6400::7/128
lo 0
172.16.0.8/32
2406:6400::8/128
lo 0
172.16.0.9/32
2406:6400::9/128
lo 0
172.16.0.10/32
2406:6400::10/128
lo 0
172.16.0.11/32
2406:6400::11/128
lo 0
172.16.0.12/32
2406:6400::12/128
172.16.28.0/30
2406:6400:100::2/127
172.16.28.4/30
2406:6400:100:1::2/127
172.16.28.16/30
2406:6400:100:4::2/127
172.16.28.20/30
2406:6400:100:5::2/127
172.16.28.8/30
2406:6400:100:2::2/127
172.16.28.24/30
2406:6400:100:6::2/127
172.16.28.12/30
2406:6400:100:3::2/127
172.16.28.28/30
2406:6400:100:7::2/127
172.16.1.0/30
2406:6400:1:1::2/127
172.16.1.4/30
2406:6400:1:2::2/127
172.16.1.8/30
2406:6400:1:2::2/127
172.16.1.12/30
2406:6400:1:3::2/127
172.16.1.16/30
2406:6400:1:4::2/127
172.16.1.20/30
2406:6400:1:5::2/127
172.16.1.24/30
2406:6400:1:6::2/127
172.16.1.28/30
2406:6400:1:7::2/127
172.16.1.32/30
2406:6400:1:8::2/127
172.16.1.36/30
2406:6400:1:9::2/127
172.16.1.40/30
2406:6400:1:a::2/127
172.16.1.44/30
2406:6400:1:b::2/127
172.16.4.0/24
2406:6400:0101::/48
172.16.5.0/24
2406:6400:0102::/48
172.16.20.0/24
2406:6400:8300::/48
172.16.21.0/24
2406:6400:8301::/48
172.16.0.0/24
2406:6400:8100::/48
172.16.17.0/24
2406:6400:8101::/48
172.16.8.0/24
2406:6400:0300::/48
172.16.9.0/24
2406:6400:0301::/48
fa0/0
fa0/1
fa0/2
fa0/5
fa0/8
fa0/11
e1/0
e1/1
e1/3
Training Lab Topology
© APNIC Training
Created: 25/09/2009
Last update: 26/10/2018